Baumer
Passion for Sensors

Level Switch LFFS

Special Features

- Wetted parts in acid-proof, stainless steel and PEEK
- Compact, food compatible, hygienic design
- Hygienic connections conform to 3-A standards, FDA demands and EHEDG guidelines
- Precise switching point without calibration
- Process temperature -40...200 °C
- Measures media with DK-values >1.5 (DK = Dielectrical Constant)
- Not influenced by foam
- LED switch indicator
- Maintenance free
- Suitable for media separation measurement
- Configurable by FlexProgrammer 9701
- ATEX approval for gas and dust
- WHG approval (leakage and overfill)

Technical Data

Sensor	
Radiated signal	100...180 MHZ
Process connection	Hygienic: G1/2, 3-A/DN38 or sliding connection
Adapters	Refer to page 5
Insulating material	PEEK Natura
Mechanical data	
Housing	Stainless Steel, W1.4301/AISI 304
Process connection	Stainless Steel, W1.4404/AISI 316 L
Amb. temperature	-40...85 °C
Process temperature Std. & 3-A/DN38 Sliding connection < 1 hour, Tamb < 60 °C Protection class	 -40...115 °C (See curve 1) -40...200 °C (See curve 1) -40...140 °C IP67 (IEC 529)
Media pressure (tested with water at 20°C)	Standard G½ hygienic < 100 bar 3-A DN38 < 40 bar Sliding connection < 16 bar
Vibrations	IEC 60068-2-6, GL test2
Installation	Any position
Electrical connection	
Cable gland M16	Plast or Nickel-plated brass
Plug M12	Nickel plated brass or stainless steel AISI 304
Other electrical data	
Power supply	12,5...36 VDC, 35 mA max.
Damping	0...10 sec.
Power-up time	<2 sec.
Hysteresis	± 1 mm
Repeatability	± 1 mm
Reaction time	0.1 sec. (100 mS)

Approvals/conformities	
Approvals/conformities	EN 1935/2004, EN 10/2011, EN 2023/2006, EN 50155 Railway, 3-A, EHEDG, FDA, WHG (leakage and overfill) UL listed, E36692
Disposal of product and packing	
According to national laws or by returning to Baumer.	
EMC data	
Immunity	EN 61326
Emission	EN 61326
Ex data (ia)	
Internal inductivity	$L_i \leq 10$ µH
Internal capacity	$C_i \leq 33$ nF
Barrier data	U ≤ 30 VDC ; I ≤ 0.1 A ; P ≤ 0.75 W
Approval Ex ia IIC T5, ATEX II 1G (See table 1)	
Supply range	24...30 VDC
Temperature class	T1...T5: -40 < T_{amb} < 85 °C
Approval Ex tD A20 IP67 T100 °C, ATEX II 1D (See table 1)	
Supply range	12,5...30 VDC
Temperature class	T100 °C: -40 < T_{amb} < 85 °C
Approval Ex nA II T5, ATEX II 3G (See table 1)	
Supply range	12,5...30 VDC
Temperature class	T1...T5: -40 < T_{amb} < 85 °C
Output	
Output (active)	Max. 50 mA, short-circuit and high-temperature protected
Output type	PNP, NPN or Digital output (Push-pull)
Output polarity	See drawing
Active "Low"	NPN and Digital output (-VDC +2.5V) ± 0.5V ; Rload 1 kOhm
Active "High"	PNP and Digital output (VDC -2.5V) ± 0.5V ; Rload 1 kOhm
Off leak current	± 100 µA Max.

Design and specifications subject to change without notice

EN/2014-08-26

Technical Data

Factory Settings	
Output	PNP, NPN or Digital
Measure	DK value >1,5
Damping	0.1 sec.

Dimensional Drawings

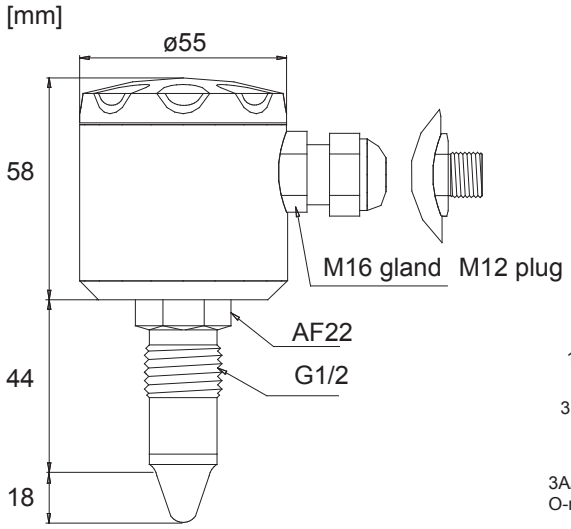

G1/2 Hygienic connection

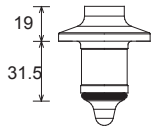

3A/DN38 Hygienic connection
O-ring EPDM incl.

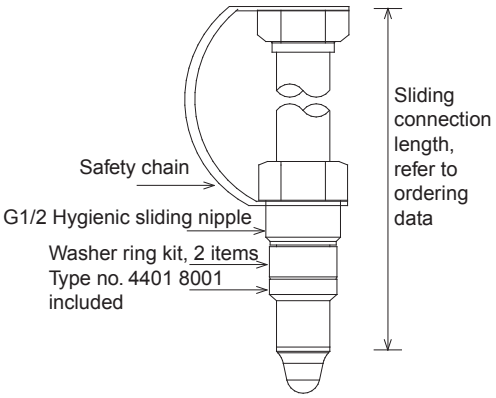

G1/2 Hygienic,
Sliding connection

Sliding connection load

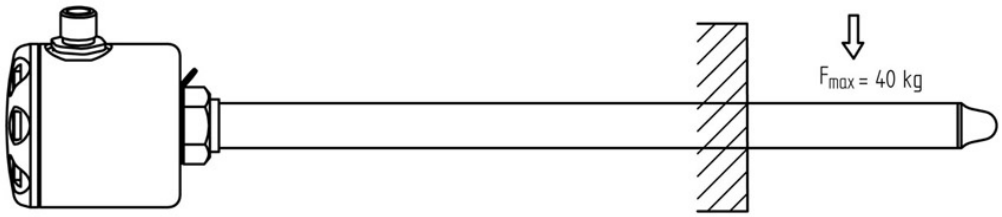

Design and specifications subject to change without notice
EN/2014-08-26

Electrical Connection

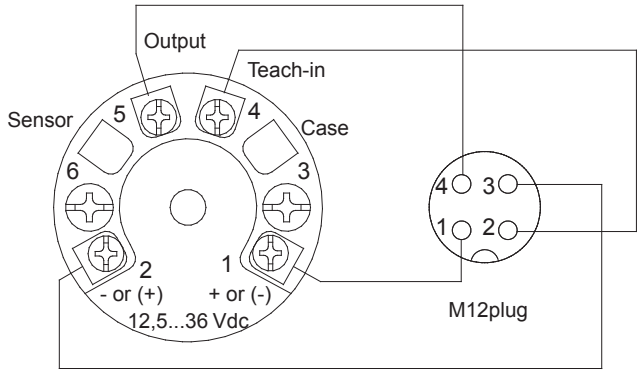

M12 plug: 1 : Brown
2 : White
3 : Blue
4 : Black

Electrical Installation

Normally Open

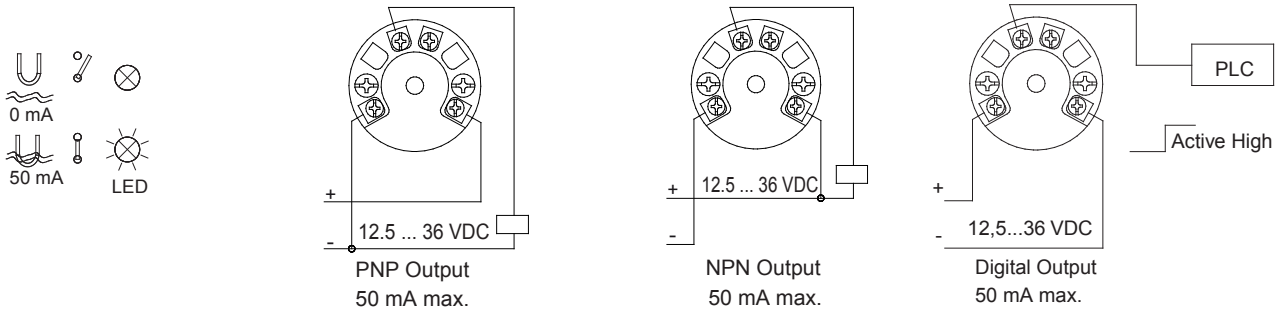

Normally Closed

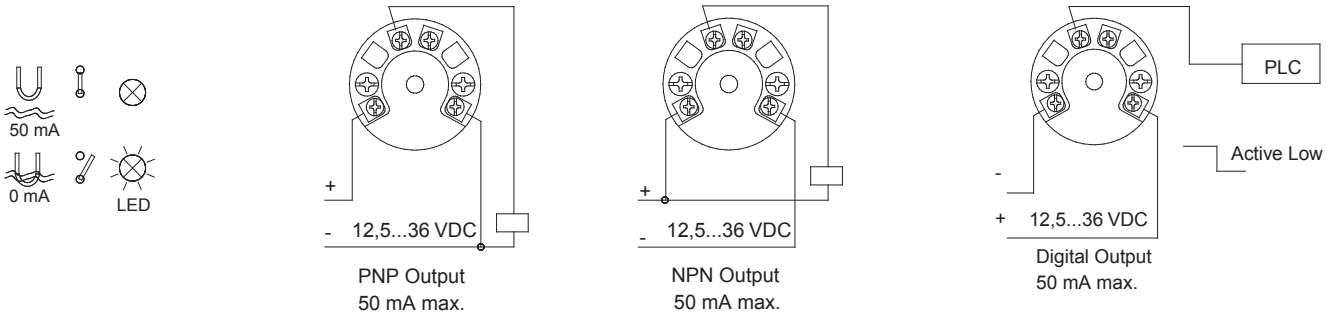

Configuration

FlexProgrammer 9701

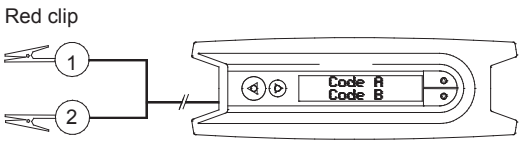

Note: Ambient temperature range 0...50°C

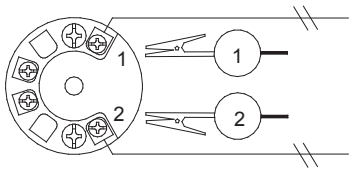

Disconnect the power supply before connecting the FlexProgrammer 9701 to the Level Switch LFFS

Accessories

The FlexProgrammer 9701 is a dedicated tool to configure all Baumer configurable Flex-products.

Type No. 9701-0001 comprises:
FlexProgrammer
Cables
CD with the FlexProgram software

Design and specifications subject to change without notice
EN/2014-08-26

The Sliding Connection (Figure 1)

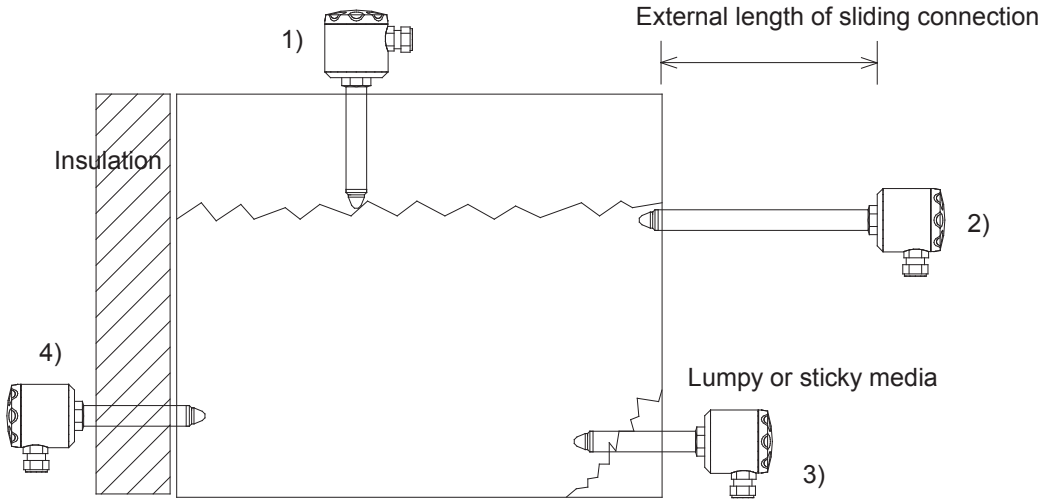

The drawing shows how the sliding connection can be used for at least 4 applications:
1) Mounted at the top of a tank to adjust to a maximum level.
2) Serving as a cooling neck in high media temperature applications.
3) Adjusted to place the sensor tip deeper inside the tank.
4) To reach in through insulation material.

It is essential that the max. ambience temperature for the electronics is never exceeded. For ATEX approved products please refer to table 1.

The working conditions for the sliding connection in different media temperatures and specified ambient temperatures can be found in curve 1.

Example, how to read Curve 1:
A 250 mm sliding connection is mounted in a tank with a total insert length of 150 mm. Hence the external length of the sliding connection will be 250 - 150 = 100 mm.
The media temperature will be max. 160 °C.
Read the x-axis at 100 mm an the y-axis at 160 °C and find that the ambient temperature must be kept below 50 °C. In case the radiated heat from the tank will cause a higher ambient temperature at the housing efficient insulation of the tank must be established

Media Temperature versus External Length of Sliding Connection (Curve 1)

Media Temperature
°C

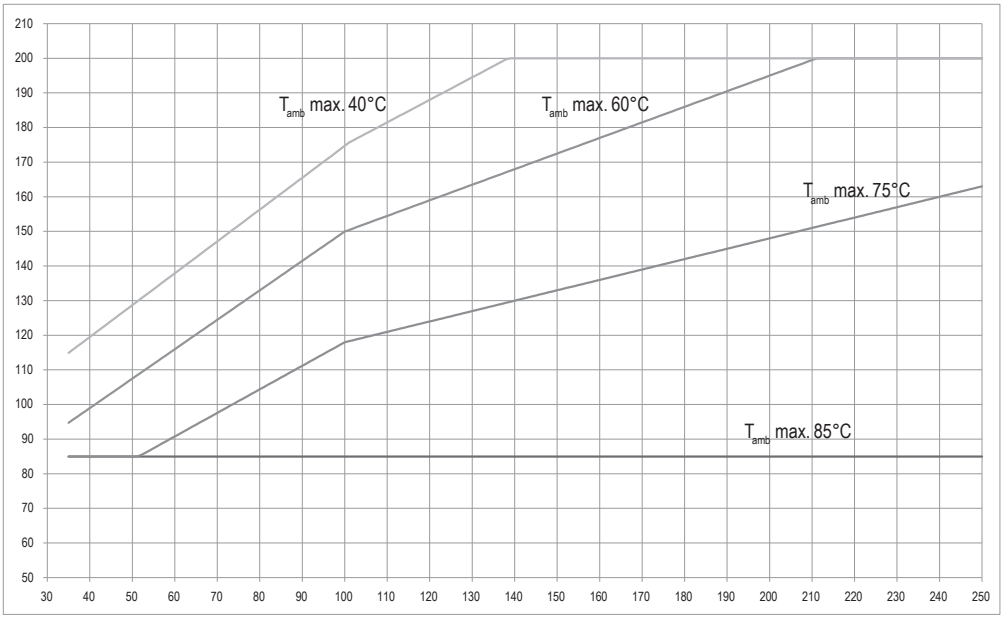

External length of sliding connection (mm) See figure 1

NB: Std. + 3A/DN38 = 35 mm external length

Design and specifications subject to change without notice
EN/2014-08-26

Accessories - Overview

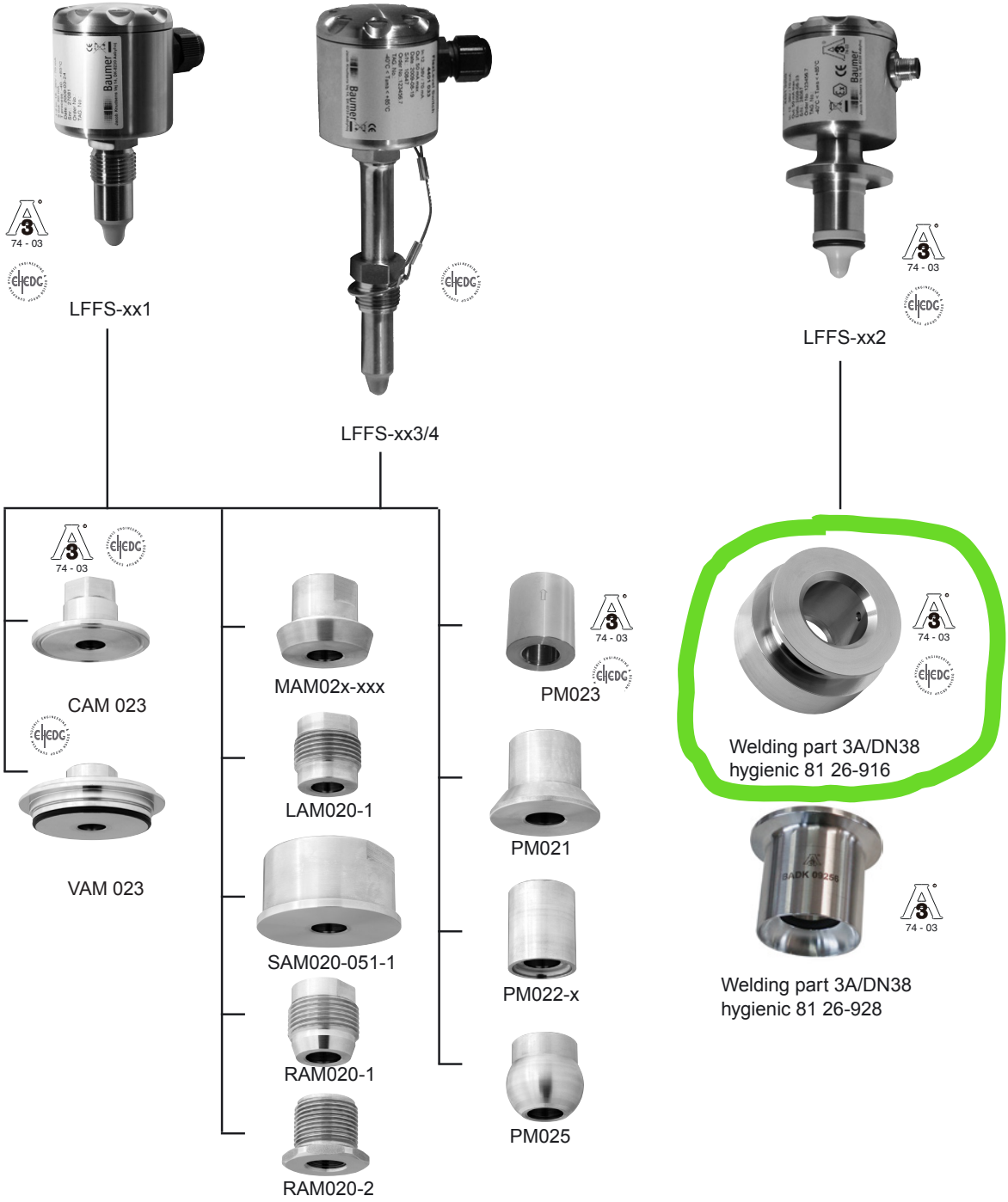

Design and specifications subject to change without notice
EN/2014-08-26

Ex ia G - Installation

A Level Switch LFFS-1xx is Ex ia IIC T5, ATEX II 1G approved for application in hasardous areas in accordance with the current EUdirectives. The product must be installed in accordance with prevailing guidelines for zone 0 with a barrier.

Ex tD - Installation

A Level Switch LFFS-2xx is Ex tD A20 IP67 T100°C, ATEX II 1D approved for application in hasardous areas in accordance with the current EU-directives. The product must be installed in accordance with prevailing guidelines for zone 20 without a barrier.

Ex ia G, Ex nA G - Installation

A Level Switch LFFS-3xx is Ex nA II T5, ATEX II 3G approved for application in hasardous areas in accordance with the current EU-directives. The product must be installed in accordance with prevailing guidelines for zone 2 without a barrier.

Conditions for Ex-Certification (Table 1)

Connection Type	Tamb °C	Media Temp. max. °C	Note
Std. & 3-A/DN38	-40...85	85	
	-40...60	95	{2}
	-40...40	115	{2}
Sliding 100 mm	-40...85	85	
	-40...60	150	{2}
	-40...40	175	{2}
Sliding 250 mm	-40...85	85	
	-40...60	195	{2}
	-40...40	200	{2} {3}

Note {2}: Provided that the sensor tip at the instrument is the only part in contact with the media.
Note {3}: Max. allowed media temperature.

Ex ia IIC T5, ATEX II 1G - Installation

A Level Switch LFFS-1xx is Ex ia IIC T5, ATEX II 1G approved for application in hasardous areas in accordance with the current EUdirectives. The product must be installed in accordance with prevailing guidelines for zone 0 with a barrier.
A certified Ex ia or isolation barrier with the maximum values U_{max} = 30 VDC ; I_{max} = 0.1 A ; P_{max} = 0.75 W must be used.

Ex-data	
Supply range	24...30 VDC
Temperature class	T1...T5: See table 1
Internal inductivity	L_i < 10 µH
Internal capacity	C_i < 33 nF
Barrier data	U < 30 VDC ; I < 0.1 A ; P < 0.75 W

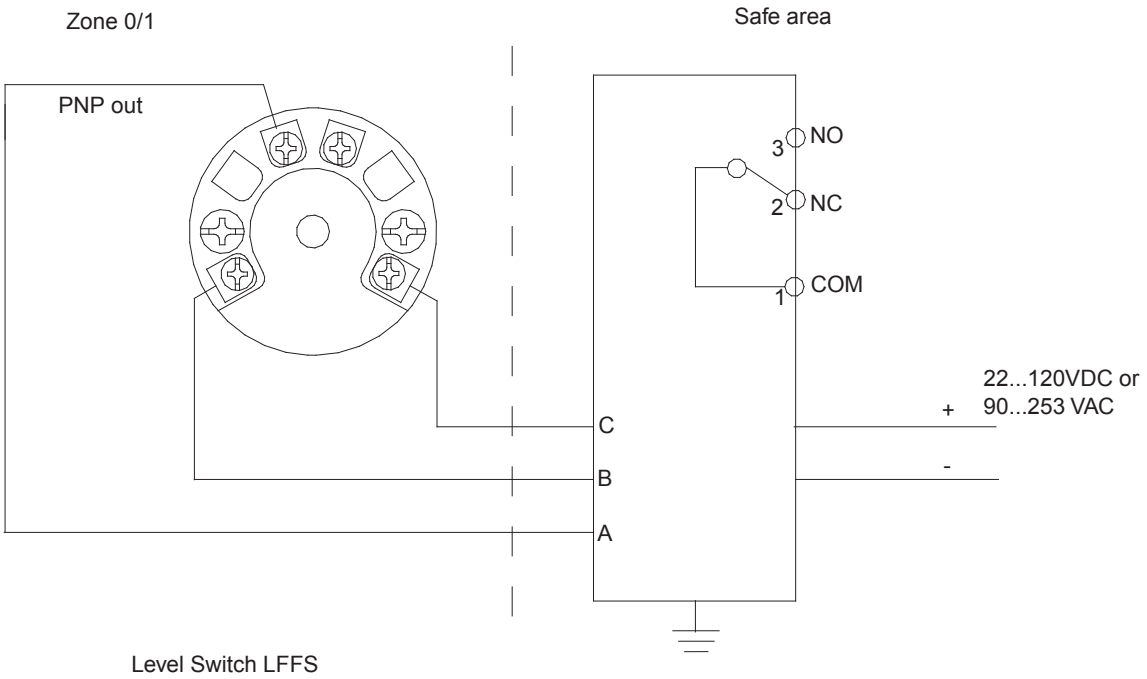

NB: For PNP output the PROFSI3-B25100-ALG-LS barrier must be used.

Isolating Module PROFSI3-B25100-ALG-LS

Design and specifications subject to change without notice
EN/2014-08-26

Ex tD A20 IP67 T100, ATEX II 1D - Installation

A Level Switch LFFS-2xx is Ex tD A20 IP67 T100°C, ATEX II 1D approved for application in hasardous areas in accordance with the current EU-directives. The product must be installed in accordance with prevailing guidelines for zone 20 without a barrier.

Ex-data	
Supply range	12,5...30 VDC, max 100 mA
Temperature class	T100: See table 1

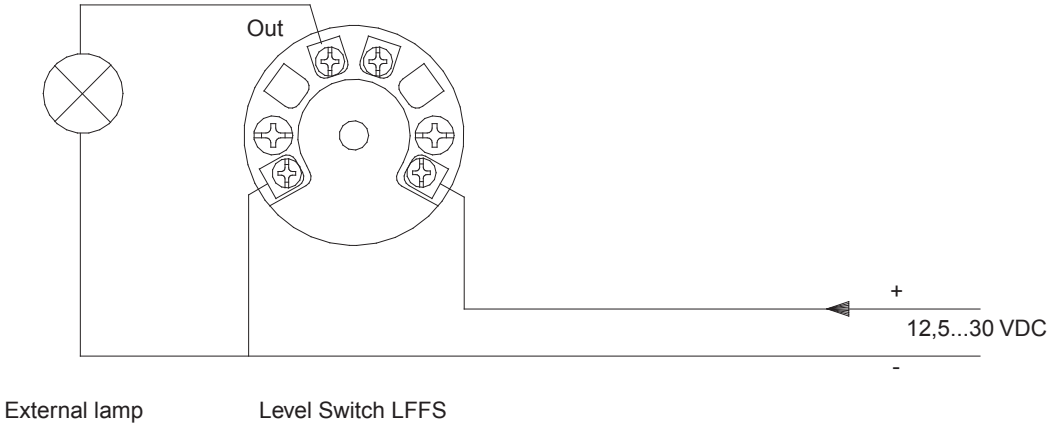

Ex nA II T5, ATEX II 3G - Installation

A Level Switch LFFS-3xx is Ex nA II T5, ATEX II 3G approved for application in hasardous areas in accordance with the current EU-directives.
The product must be installed in accordance with prevailing guidelines for zone 2 without a barrier.

Ex-data	
Supply range	12,5...30 VDC, Max. 0.1A
Temperature class	T1...T5: See table 1

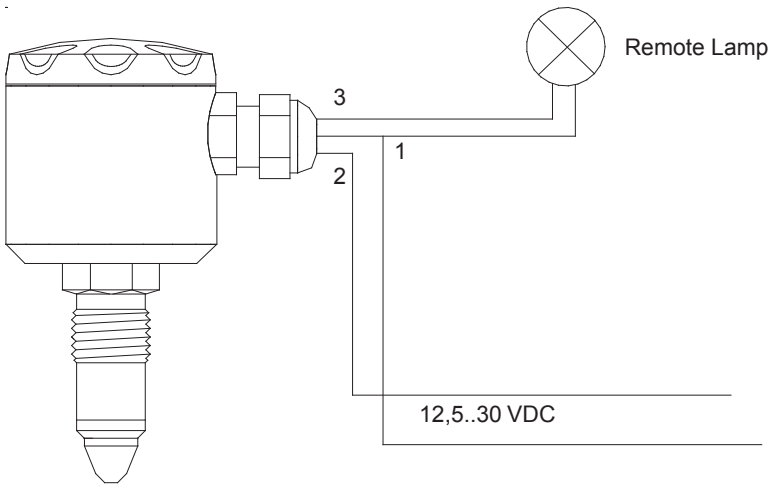

Design and specifications subject to change without notice
EN/2014-08-26

Ordering details

			–			
Model						
Level Switch		LFFS				
Safety	5' digit					
Standard			0			
Ex ia IIC T5, ATEX II 1G (Gas) *			1			
Ex tD A20 IP67 T100 °C, ATEX II 1D (Dust)			2			
Ex nA II T5, ATEX II 3G			3			
UL listed, E365692			A			
Electrical Connection	6' digit					
Plug, M12, Nickel plated brass				1		
Cable gland, M16 brass				2		
Cable gland, M16 Polyamid				3		
Plug, M12, stainless				4		
Process Connection	7' digit					
G1/2, PEEK tip (1)					1	
3-A/DN38 Hygienic connection (1)					2	
G1/2, PEEK tip, sliding connection, 100 mm adjustable, incl. washer ring kit 4401 8001 (2)					3	
G1/2, PEEK tip, sliding connection, 250 mm adjustable, incl. washer ring kit 4401 8001 (2)					4	
Configuration	8' digit					
No configuration						0
Configuring according to customer specification						C

* For PNP output the barrier module PFOFSI3-B25100-ALG-LS is required for funtional purposes.

The washer ring kit for sliding connection, type no. 4401 8001
Can be ordered separately.
Baumer recommended to replace this kit if deformed.

3-A certificate / EHEDG certificate

(1) The 3-A mark and the EHEDG certifcate is valid only when the product is mounted in a 3-A marked or EHEDG certified counter part and installed according to the installation manual. Use also a 3-A marked O-ring or gasket if relevant. The 3-A marked products conforms to the 3-A Sanitary Standard criteria. Materials and surfaces fulfill the FDA demands and are certified by EHEDG.

(2) Certified by EHEDG. Fulfills the FDA demand.
EPDM O-rings supplied with 3-A marked products are conform to Sanitary Standard Class II (8% milk fat max.)
EPDM gaskets supplied with 3-A marked products are conform to Sanitary Standard Class I (8% milk fat max.)
Refer to the 3-A marked counter parts in the data sheet “Accessories Universal”.

Level Switch LFFS, example

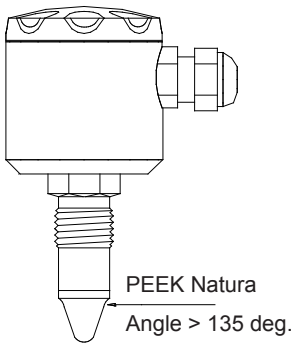

Design and specifications subject to change without notice
EN/2014-08-26